

REVOLVING DOORS

Revo.PRIME

Contents

Revolving door systems 4

General information (types of drive units, number of door leaves, passage capacity) 6

REVO.PRIME

Revo.PRIME 10

Revo.PRIME GG 12

Revo.PRIME BO 14

Revo.PRIME RC2 17

ACTIVATION DEVICES AND SERVICE TOOLS

Activation 22

Protection 23

Operation 25

Service tools 26

INSTALLAION DRAWINGS 27

CABLE PLAN 31

REFERENCE PROJECTS 33

Revolving door systems

FOCAL POINT OF THE ENTRANCE AREA

The most beautiful way to say welcome. GEZE revolving doors fulfil multiple purposes at entrances of public buildings. Safe, convenient and in an elegant design, they enable people to come in and go out without disruption. And anything that needs to stay outside remains outside, such as unpleasant weather or draughts. This increases the energy efficiency of the building. You can choose between a manual or automatic version, depending on how much visitor traffic your door needs to manage. We are happy to answer any questions you may have about revolving door systems.

As a highlight, the GEZE Revo.PRIME revolving door impresses thanks to the minimal canopy height of just 75 mm with a barely visible drive unit. Thanks to narrowest profile systems, it also impresses with maximum design in the entrance area – for more free space, more transparency, and an open airy feeling. It thus fulfils – like all other variants – the most stringent demands, and gets planners, operators and building users excited.

ADVANTAGES AT A GLANCE

- Prestigious entrance with sophisticated looks thanks to the minimal canopy height and narrow profile systems for greater transparency
- High-quality materials, state-of-the-art control technology and advanced drive technology guarantee high ease of access with low energy consumption for an open and airy feeling
- Greater insulation effect against draughts, the weather and noise
- Suitable for large numbers of visitors
- Greater creative freedom thanks to individual planning and production for each project
- Fast installation due to a high degree of prefabrication ex works
- Can be networked and integrated into the building automation via open standard (BACnet)
- Simple and effective parameter setting and maintenance with the GEZEconnects tool
- Approved in accordance with EN 16005 in all variants

OUR REVOLVING DOOR SYSTEMS

- **Revo.PRIME**
  Sophisticated revolving door system for manual or automatic operation with the most stringent demands in terms of design and ease of access
- **Revo.PRIME GG**
  All-glass revolving door system for maximum transparency
- **Revo.PRIME BO**
  Revolving door system for use in escape and rescue routes with break-out leaves
- **Revo.PRIME RC2**
  Burglar-resistant revolving door system with automatic night-time closer

	Revo.PRIME	Revo.PRIME GG	Revo.PRIME BO	Revo.PRIME RC2
Manual operation	●	●		●
With speed limiter (optional)	●	●		●
With positioning device (optional)	●	●		●
Fully automatic operation	●	●	●	●
Suitability for escape and rescue routes			●	
Break-out function (BO)			●	
Inner diameter (min.)	1800 mm	1800 mm	1800 mm	2200 mm
Inner diameter (max.)	3800 mm	3000 mm	3600 mm	3800 mm
For 3-leaf door systems	●	●	●	●
For 4-leaf door systems	●	●	●	●
Clear passage height*	3500 mm	3000 mm	3000 mm	3000 mm
Canopy height (min.)	75 mm	17 mm	200 mm	75 mm
Side elements version	10 mm LSG, 22 mm panel infill, special glass on request	16 mm all-glass, special glass on request	10 mm LSG, 22 mm panel infill, special glass on request	10 mm LSG, special glass on request
Surfaces				
Powder-coated according to RAL	●	●	●	●
Anodised aluminium E6 / EV1	●	●	●	●
Coated with grit 240 stainless steel	●	●	●	
Coated with polished stainless steel	●	●	●	
Special coating on request	●	●	●	
Roof construction				
Tin roof	●			●
Waterproof roof with waterspout	●		●	●
Dust protection roof with wood covering			●	
Optical sheet metal covering			●	
Glass roof		●		
Lighting	for variant with roof	not possible with glass roof	for variant with roof	for variant with roof
Flooring	entrance mat	entrance mat	entrance mat	entrance mat
Air curtain system	electric air curtain, hot water air curtain possible, depends on the ceiling construction	none	electric air curtain, hot water air curtain possible, depends on the ceiling construction	electric air curtain, hot water air curtain possible, depends on the ceiling construction
Night-time closer layout	inside, outside	outside	inside, outside	inside
Night-time closer type	manual / automatic	manual	manual / automatic	automatic
Night-time closer design	10 mm LSG, 22 mm insulating glass, 22 mm panel infill, special glass on request	16 mm LSG	10 mm LSG, 22 mm insulating glass, 22 mm panel infill, special glass on request	10 mm LSG, special glass on reques
Locking mechanism	manual, rod, electromechanical	manual	manual, rod, electromechanical	manual, rod, electromechanical
Door handles horizontal or vertical	●	●	●	●
Floor ring	●	●	●	●
Underfloor drive	●	●		
Push pad	●	●	●	●
Statements of approval	EN 16005	EN 16005	EN 16005	EN 16005

● = Yes I — = Not available I * = Higher on request

General information

TYPES OF DRIVE UNITS, NUMBER OF DOOR LEAVES, PASSAGE CAPACITY, DIMENSIONS, PASSAGE WIDTHS, MINIMUM CANOPY HEIGHTS

TYPES OF DRIVE UNITS

Manual revolving door
Manual revolving doors are used where there is limited access frequency, and can have a diameter of up to approx. 3000 mm. Larger diameters (up to max. 3800 mm) are possible, however ease of access is significantly reduced due to the increased exertion of force and the increased friction of the brush. Manually operated revolving doors are available in three- and four-leaf versions, each of which is available as an all-glass variant. The doors can be operated by slightly pushing them. Safety features are not necessary in accordance with EN 16005. Two modes of operation are available: 'Locked' and 'Manual'.

Option: Speed limiter
The optional speed limiter counteracts a further increase in peripheral speed as soon as the top limiting speed has been reached.

Option: Positioning device
The optional positioning device with a motor gear unit in the ceiling or the floor returns the door to the initial position with a minimum of force after manual opening so that it is ready for the next visitor. The door is thus always in the end position and leaves a well-ordered optical impression.

Fully automatic revolving door
The fully automatic door with movement detectors is suited for high access frequency. Thus this revolving door offers maximum comfort and smooth and trouble-free passage. These door systems can be produced up to a maximum inner diameter of 3800 mm. The automatic revolving door is activated via inside and outside movement detectors. Upon activation, the door accelerates and rotates at an automatic speed. The speed is adjustable and the time delay can be freely adjusted for the modes of operation 'summer' (longer delay) and 'winter' (no delay). As a further option, a push pad can be installed on the door inside and outside. When this push pad is activated, the revolving speed is reduced to allow wheelchair users or people with restricted mobility to pass through the revolving door without any problems. This reduced speed can also be adjusted.
At the end of the time delay the revolving door reduces speed in all modes of operation and stops in the end position.
The door leaves seal tightly against the side walls, thus leaving all environmental influences such as draughts, exhaust gases from vehicles, cold and noise outside the building.

NUMBER OF DOOR LEAVES

The decision for a three- or four-leaf revolving door
The three-leaf revolving door has a slightly reduced passage capacity. However, it offers greater ease of access, since there is significantly more space between the door leaves. This higher comfort mainly accommodates people with restricted mobility who cannot adapt themselves easily to the revolving speed of the revolving door. This type of door is first choice for shopping centres. The passage width on the door opening is smaller than that of a four-leaf revolving door with the same diameter.

The four-leaf revolving door is the classic version with the highest capacity, suited for two-way traffic and large streams of visitors. Due to the symmetric construction, the drum of the revolving door is closed by two leaves. This results in an improved protection against environmental influences and an improved vestibule effect.
This type of door has a larger opening width and is optically very attractive due to its symmetrical form.

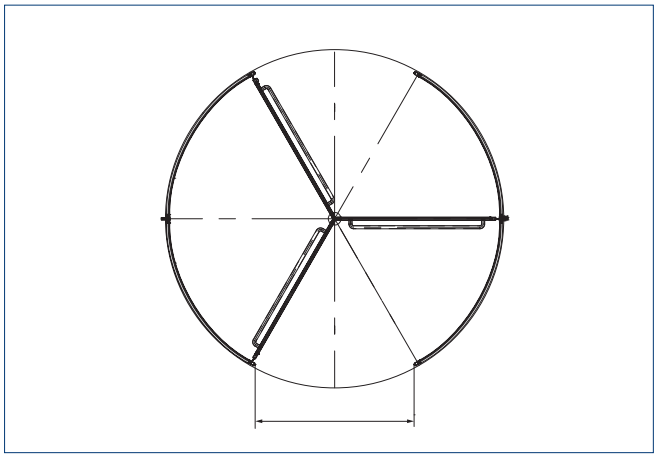

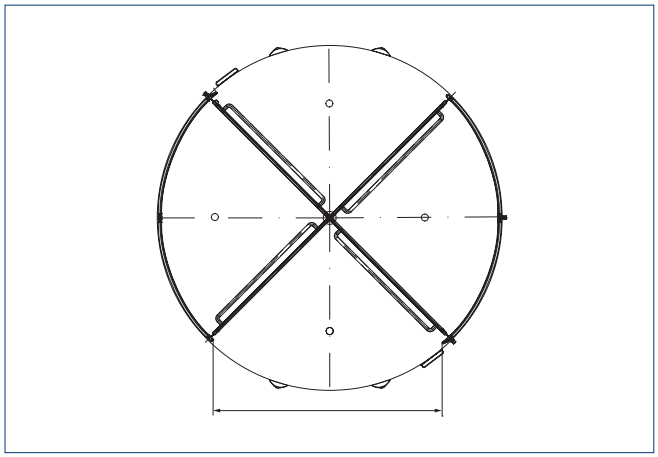

PASSAGE CAPACITY

	3-leaf		4-leaf	
Inner diameter (as an example)	Capacity persons/ hour	Persons/minute	Capacity persons/ hour	Persons/minute
2000 mm	1203	20	1604	26
2400 mm	1002	16	1336	22
2800 mm	1718	28	2291	38
3200 mm	2256	37	3008	50
3600 mm	2005	33	2673	44
3800 mm	2280	38	2880	48

All stated values refer to the maximum capacity in one direction and a peripheral speed of 0.7 m/s.

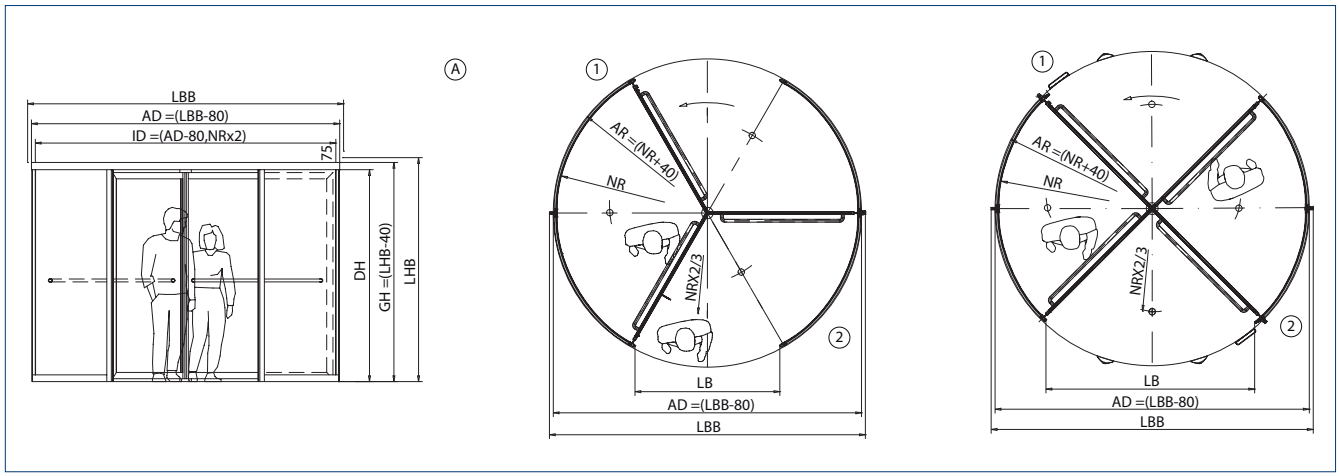

A = View variant, three-leaf I Floor plans variant three-leaf manual and four-leaf automatic variant I LBB = Clear passage width building (minimum distance to the side of the façade is 40 mm) I AD = External diameter I ID = Internal diameter I DH = Clear passage height I GH = Overall system height I LHB = Clear passage height building (minimum distance to the top is 40 mm) I NR = Nominal radius I LB = Passage width I 1 = Interior I 2 = Exterior

PASSAGE WIDTHS FOR MANUAL REVOLVING DOORS

	3-leaf	4-leaf
Inner diameter (as an example)	Glass in frame	Glass in frame
2000 mm	945 mm	1370 mm
2400 mm	1145 mm	1652 mm
2800 mm	1345 mm	1934 mm
3200 mm	1545 mm	2216 mm
3600 mm	1745 mm	2498 mm
3800 mm	1844 mm	2645 mm

PASSAGE WIDTHS FOR AUTOMATIC REVOLVING DOORS

	3-leaf	4-leaf
Inner diameter (as an example)	Glass in frame	Glass in frame
2000 mm	895 mm	1325 mm
2400 mm	1097 mm	1609 mm
2800 mm	1297 mm	1893 mm
3200 mm	1497 mm	2177 mm
3600 mm	1697 mm	2461 mm
3800 mm	1795 mm	2604 mm

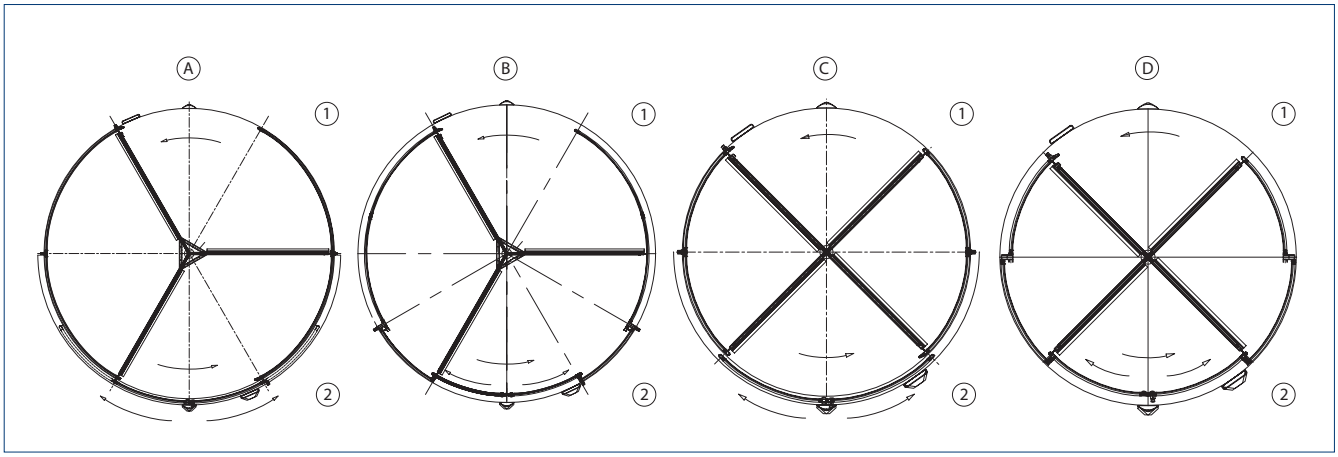

A = Three-leaf with outside-running night-time closer I B = Three-leaf with inside-running night-time closer I C = Four-leaf with outside-running night-time closer I D = Four-leaf with inside-running night-time closer I 1 = Inside I 2 = Outside



REVOLVING DOORS

Revo.PRIME

This door system plays the starring role when it comes to creative freedom and transparency in the entrance area of your building. A minimum canopy height of just 75 mm and a barely visible drive unit make this possible. And that's not all: with a narrow profile system of just 60 mm, this revolving door really steals the show. Advanced drive technology ensures maximum ease of access and safety when passing through the door. And because our energy is precious, this system runs with low consumption and thus scores highly in terms of sustainability.

Revo.PRIME



Automatic revolving door system with low canopy height and narrow profile system for three- or four-leaf doors

AREAS OF APPLICATION

- Three- and four-leaf door systems
- Interior and exterior doors with high access frequency
- Prestigious building entrances with major light incidence
- Façades with narrow mullion-transom constructions
- Glass façades with maximum design appeal
- Inner diameters of 1800 to 3800 mm possible
- Suitable profile systems are fine-framed profile system with insulating and mono glass

PRODUCT FEATURES

- Very quiet-running, low-wear drive solution with a canopy height of just 75 mm
- Precise closing between door leaves and side walls
- High insulation effect against draughts, the weather and noise
- Adjustable automatic speed to suit the number of people passing through
- Door can be operated manually, e.g. for carrying out cleaning work
- Can be networked, and integrated into the building automation via open standard (BACnet)
- Independent error recognition and recording
- Freely configurable inputs and outputs for different functions
- Integrated rechargeable battery for emergency opening in the event of safety-relevant faults such as a power failure

TECHNICAL DATA	Revo.PRIME
Manual operation	●
With speed limiter (optional)	●
With positioning device (optional)	●
Fully automatic operation	●
Inner diameter (min.)	1800 mm
Inner diameter (max.)	3800 mm
For 3-leaf door systems	●
For 4-leaf door systems	●
Clear passage height	3500 mm
Canopy height (min.)	75 mm
Side wall version	10 mm LSG, 22 mm panel infill, special glass on request
Roof construction	optical sheet metal covering, waterproof roof with waterspout
Lighting	for variant with roof
Flooring	Entrance mat, floor mat, according to customer preference
Air curtain system	Electric air curtain, hot water air curtain possible depending on the ceiling construction
Night-time closer layout	Inside, outside
Night-time closer type	manual, automatic
Night-time closer design	10 mm LSG, 22 mm insulating glass, 22 mm panel infill, special glass on request
Locking mechanism	manual rod, electromechanical
Door handles horizontal or vertical	●
Floor ring	●
Underfloor drive	●
Push pad	●
Statements of approval	EN 16005

● = Yes

Revo.PRIME GG



Foto: GEZE GmbH

Automatic revolving door system for the realisation of all-glass solutions

AREAS OF APPLICATION

- Three- and four-leaf all-glass door systems
- Interior and exterior doors with high access frequency
- Prestigious building entrances with major light incidence
- Façades with narrow post-rail constructions
- Glass façades with maximum design appeal
- Inner diameters of 1800 to 3000 mm possible

PRODUCT FEATURES

- Very quiet-running, low-wear drive solution with at least 17 mm canopy height
- Drive and control technology are fully concealed in the floor
- Glass roof with reduced profiles for more transparency
- Reduced aluminium profiles with rounded edges create a modern look
- Side walls in curved laminated safety glass (LSG)
- Door leaves made of fine-framed toughened safety glass
- Two half shells made of heat strengthened soda lime silicate glass form the roof which is held by stainless steel single point fixing holders
- Precise closing between door leaves and side walls
- High insulation effect against draughts, the weather and noise
- Adjustable automatic speed to suit the number of people passing through
- Door can be operated manually, e.g. for carrying out cleaning work
- Can be networked, and integrated into the building automation via open standard (BACnet)
- Independent error recognition and recording
- Freely configurable inputs and outputs for different functions
- Integrated rechargeable battery for emergency opening in the event of safety-relevant faults such as a power failure

TECHNICAL DATA	Revo.PRIME GG
Manual operation	●
With speed limiter (optional)	●
With positioning device (optional)	●
Fully automatic operation	●
Inner diameter (min.)	1800 mm
Inner diameter (max.)	3000 mm
For 3-leaf door systems	●
For 4-leaf door systems	●
Clear passage height*	3000 mm
Canopy height (min.)	17 mm
Side wall version	16 mm GG, special glass on request
Surfaces	Powder-coated according to RAL, anodised aluminium E6/EV1, covered with grit 240 stainless steel, covered with polished stainless steel, special coating on request
Roof construction	Glass roof
Lighting	not possible with glass roof
Flooring	Entrance mat, floor mat, according to customer preference
Air curtain system	none
Night-time closer layout	outside
Night-time closer type	manual
Night-time closer design	10 mm LSG
Locking mechanism	manual
Door handles horizontal or vertical	●
Floor ring	●
Underfloor drive	●
Push pad	●
Statements of approval	EN 16005

● = Yes I — = Not available I * = Higher on request

Revo.PRIME BO



Foto: Lorenz Frey / GEZE GmbH

Automatic revolving door system for escape and rescue routes with break-out function

AREAS OF APPLICATION

- Three- and four-leaf door systems in escape and rescue routes
- Interior and exterior doors with maximum safety requirements
- Representative building entrances with large incidence of light
- Façades with slim mullion-transom constructions
- Glass façades with the highest design standards
- Inner diameter ranging from 1800 to 3600 mm possible
- Suitable profile systems are fine-framed profile systems with insulating and MONO glass

PRODUCT FEATURES

- BO function allows the leaves to swing open in the direction of escape
- Electrical locking mechanisms for "night mode" integrated
- Very quiet running, low-wear drive solution with a canopy height of only 200 mm
- Precise closing of the door leaves with the side walls
- Effective insulation effect against draughts, weather and noise
- Adjustable automatic speed setting, in line with the number of people passing through
- Manual operation of the door possible, e.g. to carry out cleaning work
- Can be networked, and integrated into the building automation via open standard (BACnet)
- Independent error recognition and recording
- Freely configurable inputs and outputs for different functions
- Integrated, rechargeable battery for emergency opening in case of safety-relevant faults, such as power failures

TECHNICAL DATA	Revo.PRIME BO
Fully automatic operation	●
Suitability for escape and rescue routes	●
Break-out function (BO)	●
Inner diameter (min.)	1800 mm
Inner diameter (max.)	3600 mm
For 3-leaf door systems	●
For 4-leaf door systems	●
Clear passage height*	3000 mm
Canopy height (min.)	200 mm
Side wall version	10 mm LSG, 22 mm panel infill, special glass on request
Surfaces	Powder-coated according to RAL, anodised aluminium E6/EV1, covered with grit 240 stainless steel, covered with polished stainless steel, special coating on request
Roof construction	Dust protection roof with wood covering, optical sheet metal covering, waterproof roof with waterspout
Lighting	●
Flooring	Entrance mat
Air curtain system	Electric air curtain, hot water air curtain possible depending on the ceiling construction
Night-time closer layout	Outside: outside-running, outside: inside-running, inside: outside-running, inside: inside-running
Night-time closer type	manual, automatic
Night-time closer design	10 mm LSG, 22 mm insulating glass, 22 mm panel infill, special glass on request
Locking mechanism	manual, rod, electromechanical
Door handles horizontal or vertical	●
Floor ring	●
Push pad	●
Satetements of approval	EN 16005

● = Yes I * = Higher on request

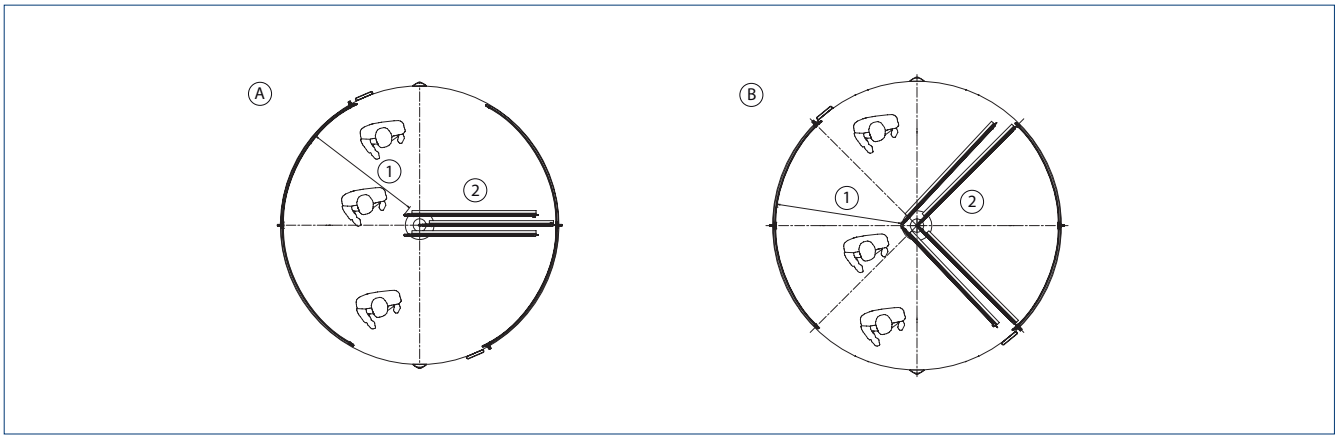

Revo.PRIME BO variants

A = Three-leaf I B = For-leaf I 1 = Escape route width I 2 = Leaf opened

ESCAPE ROUTE WIDTH

	3-leaf	4-leaf
Inner diameter	Escape route width (FWB)	Escape route width (FWB)
1800 mm	650 mm	660 mm
2000 mm	750 mm	760 mm
2200 mm	850 mm	860 mm
2400 mm	950 mm	960 mm
2600 mm	1050 mm*	1060 mm*
2800 mm	1150 mm*	1160 mm*
3000 mm	1250 mm*	1260 mm*
3200 mm	1350 mm*	1360 mm*
3400 mm	1450 mm*	1460 mm*
3600 mm	1550 mm*	1560 mm*

* = Suitable for escape and rescue routes

Breaking out of a leaf will result in immediate disconnection of the drive unit. Afterwards it is possible to move the leaves manually (even when broken out).

Due to the manual breaking out function, the use of Revo.PRIME BO is limited to max. 220 N in areas with increased wind load. Depending on the diameter and the clear height, GEZE revolving doors can be used up to a wind speed of max. 6 Beaufort (Bft). This is equal to approx. 49 km/h. If the leaves are only used for ventilation and transport purposes, the break-out force can be increased, which will result in an increased break-out resistance in the case of wind pressure. If the leaves are only used for ventilation and transport purposes, the break-out force can be increased, which will result in an increased break-out safety in the case of wind pressure.

To prevent people from entering the building through the break-out leaves, two leaves must be locked at the minimum. This can be done as follows:

– two electromechanical locking mechanisms on the turnstile
  or
– night-time closer sliding doors (automatic or manual)

→ **Note:** The use of revolving doors in escape and rescue routes must be according to local safety regulations and planning laws.

Revo.PRIME RC2



BAU trade fair, GEZE trade fair stand, Munich, Germany (Foto: Lazaros Filoglou / GEZE GmbH)

Automatic revolving door system with burglar resistance in accordance with resistance class 2

AREAS OF APPLICATION

- Three- and four-leaf door systems
- Interior and exterior doors with maximum safety requirements
- Representative building entrances with large incidence of light
- Façades with slim mullion-transom constructions
- Glass façades with the highest design standards
- Inner diameter ranging from 2500 to 3800 mm possible
- Suitable profile systems are fine-framed profile systems with insulating and MONO glass

PRODUCT FEATURES

- Certified burglar resistance according to resistance class RC2
- The RC2 function is only enabled in night mode
- Equipped with a rod locking and reinforced profile components
- Very quiet running, low-wear direct current drive solution with a canopy height of at least 75 mm
- Precise closing of the door leaves with the side walls
- Effective insulation effect against draughts, weather and noise
- Adjustable automatic speed setting, in line with the number of people passing through
- Can be networked, and integrated into the building automation via open standard (BACnet)
- Independent error recognition and recording
- Freely configurable inputs and outputs for different functions
- Integrated, rechargeable battery for emergency opening in case of safety-relevant faults, such as power failures

TECHNICAL DATA	Revo.PRIME RC2
Fully automatic operation	●
Inner diameter (min.)	2200 mm
Inner diameter (max.)	3800 mm
For 3-leaf door systems	●
For 4-leaf door systems	●
Clear passage height*	3000 mm
Canopy height (min.)	75 mm
Side wall version	10 mm LSG, Special glass on request
Surfaces	Powder coated according to RAL, anodised aluminium E6/EV1, special coating on request
Roof construction	optical sheet covering, waterproof roof with waterspout
Lighting	●
Flooring	Entrance mat
Air curtain system	Electric air curtain, hot water air curtain possible depending on the ceiling construction
Night-time closer layout	inside
With speed limiter (optional)	●
With positioning device (optional)	●
Night-time closer type	automatic
Night-time closer design	10 mm LSG
Locking mechanism	manual, rod, electromechanical
Door handles horizontal or vertical	●
Floor ring	●
Push pad	●
Satetements of approval	EN 16005

● = Yes I * = Higher on request

→ **Hinweis:** Die einbruchhemmende Funktion RC2 ist nur in der Betriebsart „Nacht“ gegeben.





REVOLVING DOORS

Activation devices and service tools

Sensors are the masterminds behind revolving doors, with a full focus on comfort and safety. Activation devices create accessibility and protect against accidents. Choose radar movement detectors or sensor switches for activation, sensor strips or active infrared detectors for protection, or programme switches to set the mode of operation of your automatic door. Our service tools make parameter setting simple.

Activation

RADAR MOVEMENT DETECTORS

Radar movement detectors register all objects that move within the radar field. All movements within the radiation range are recorded as a switching pulse which is forwarded as a door opening signal. The pre-programmed convenience setting of the GEZE radar movement detectors ensures fast commissioning. Automatic configuration is possible via the push buttons or a remote control. Reliable detection is achieved with a clearly defined radar field. Energy can be saved through the people movement direction detection. Unwanted door opening is avoided since cross-traffic can be faded out.



GC 308 radar movement detector

SENSOR SWITCH

Just a light touch of the push button is sufficient to open your automatic revolving door. Thanks to illuminated LEDs, these push buttons are also easy to see in poor lighting conditions. A visual signal indicates activation through the sensor switch. Capacitive contact sensors, another name for these push buttons, fulfil the highest requirements for hygiene.



LED sensor switch 20 mm

Protection

SAFETY DEVICES AND SENSORS

Leading mullion safety sensor
The leading mullion safety sensor is a presence detector that works on the basis of active infrared. It monitors the area in front of the mullion by means of an active infrared detector which is only activated as one of the leaves of the revolving door approaches the mullion. The detection area of the sensor can be set.

Emergency–stop switch inside and outside
The emergency stop switch inside and outside is mounted to the static side wall and triggers maximum braking in an emergency, which brings the revolving door to an immediately standstill. After it has been braked, the door can be rotated or operated in both directions.

Keypad programme switch
The different modes of operation of an automatic revolving door can be set using the keypad programme switch. The optional key switch can be used to block unauthorised operation of the keypad programme switch.

Warning notice inside and outside
Warning signs must be attached to all revolving doors to make parents aware of their duty to take care of their children.

Push pad
The push pad is attached on the inside and outside of the static side wall or nearby on the wall or façade. When the push pad is activated, the revolving speed of the revolving door is reduced to allow people with restricted mobility to pass. The speed and duration of activation can be set.

Mullion safety
Mullion safety is a rubber pressure sensitive protective equipment which is fitted to the main closing edge on the fixed side wall of the revolving door. This protective equipment triggers emergency braking of the door when contacted When emergency braking is triggered, the revolving door is slowed down until standstill, remains stopped for an adjustable period and then continues its movement in the set mode of operation and speed.

Heel safety
The heel safety is a rubber pressure sensitive protective equipment that is attached horizontally to the bottom of a revolving door leaf. It prevents an obstacle or a person being caught by the revolving door leaves. As soon as the protective equipment makes contact with an obstacle or a person, emergency braking is triggered and the revolving door stops immediately. When emergency braking is triggered, the revolving door is slowed down until standstill, remains stopped for an adjustable period and subsequently continues its movement in the set mode of operation and speed.

Vertical safety contact strip
The safety contact strip is a rubber pressure sensitive protective equipment which is attached vertically to the outer edge of the side-hung leaf and prevents people being drawn in. As soon as a person or a part of the body gets in contact with the protective equipment, emergency braking is triggered and the revolving door is stopped immediately. When emergency braking is triggered, the revolving door is slowed down until standstill, remains stopped for an adjustable period and then continues its movement in the set mode of operation and speed.

Mobile safeguarding device
'Mobile safeguarding devices' are optical sensors which are fixed to the top edge of the side-hung leaves. They work on an infrared basis and optically monitor the area in front of the rotating leaves of a revolving door. As soon as the sensor recognises an obstacle or a person, the revolving door is slowed down. If the obstacle remains within the detection area of the sensor, the revolving speed is reduced to such an extent that the rotating leaf of the door comes to a standstill in front of the obstacle. The sensitivity and detection area of the sensors can be set.

OPERATING ELEMENTS

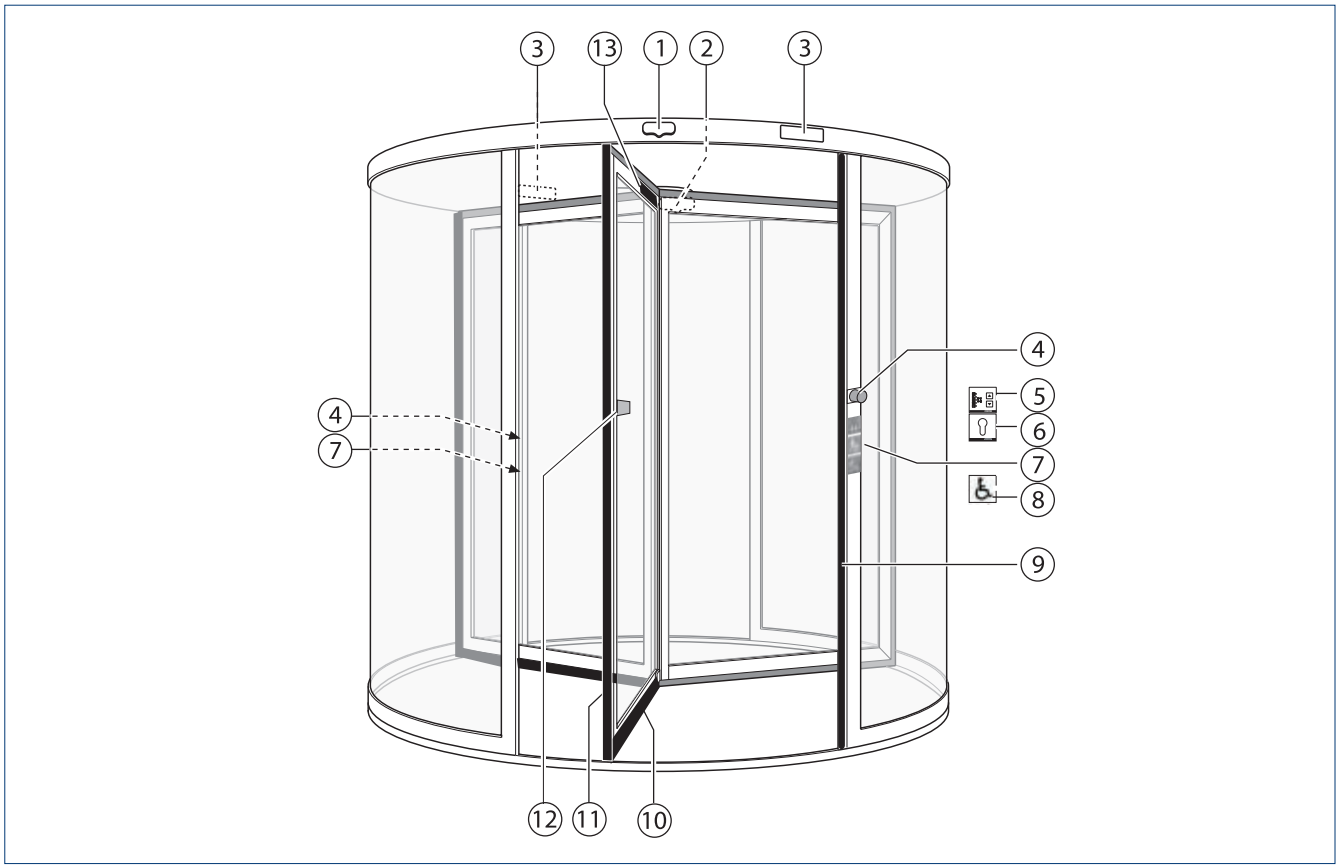

Keypad programme switch with key switch (TPS-SCT)

1 = Movement detector inside I 2 = Movement detector outside I 3 = Leading mullion safety sensor I 4 = Emergency-stop switch inside and outside I 5 = Keypad programme switch I 6 = Key switch I 7 = Warning sign inside and outside I 8 = Push pad (optional) I 9 = Mullion safety I 10 = Heel protection strip I 11 = Vertical safety contact strip I 12 Emergency exit sign break-out (optional) I 13 = Mobile safeguarding device (optional)

PROTECTION SENSOR STRIP, ACTIVE INFRARED DETECTOR, LASER SCANNER



GC 339+ safety sensor



FLATSCAN REV LZ

Operation

PROGRAMME SWITCH TO SELECT THE MODE OF OPERATION OF REVOLVING DOORS

The following modes of operation can be set:

OFF
In the 'OFF' operating status, the motor gear unit is switched off and the door can be rotated freely by hand. This operating status is especially suitable for maintenance and cleaning of the door. All activation devices are switched off.

Night mode
In the 'night mode' operating status, a wide range of different locking options can be selected for the revolving door.
– No locking
– Manual locking of the door leaves using a bar lock
– Locking using the electromechanical disc brake
– Electromechanical locking of the door leaves
– Locking with manual night-time closer
– Locking with automatic night-time closer

Exit only
In the 'exit only' operating status, the door is activated by the internal movement detector only. It revolves a preset number of sectors at automatic speed and then stops in the end position.

Automatic
All the connected pulse generators are active in the 'Automatic' operating status. After activation, the door accelerates to a preset automatic speed, rotates the preset number of sectors and then changes over to a reduced speed. The slow revolving speed and time delay can be set. Pressing both arrow keys at the same time changes the system to "winter mode". In this case, there is no time delay and the revolving door moves immediately to the end position. As an option, a push pad can be connected. When this push button is activated, the revolving speed is reduced so that people with restricted mobility can pass through the door without any problems. The revolving speed and time delay can also be set.

Manual
The revolving door can be rotated freely in manual operation. If no further functions are set, the 'Manual' operating status is identical to the 'OFF' operating status. The following option can be set here: A positioning deviceautomatically brings the door to the end position at slow speed following manual opening. Safety functions can be deactivated.

PROTECTION OF THE PROGRAMME SWITCHES

Keypad programme switches can be combined with a key switch. This ensures that only the key-holder can make changes to the mode of operation. Key switches that are protected against vandalism can be used when the door has to be opened from the outside by authorised persons only.


Keypad programme switch (TPS)


Keypad programme switch with key switch (TPS-SCT)


Burglary-resistant key switch

Service tools

SERVICE TOOLS

GEZEconnects
Bluetooth® is an internationally standardised short-distance radio signal with a range of up to ten metres. The GEZEconnects software makes wireless connection via Bluetooth® possible between a computer and the automatic door systems from GEZE. All door system settings can be carried out via an intuitive graphic interface, stored, sent by e-mail and transferred to a word processing programme as a protocol. Diagnosis functions show the most important function parameters of the door system in real time, so that faults are recognised at a glance and can be eliminated. All the pre-settings can be taken over very easily for further door systems. The convenient documentation of commissioning, maintenance and diagnosis protocols as well as all statistical data can be downloaded at any time. Password protection to block operating parameters and servicing data guarantees security against unauthorised modifications.

ST 220 service terminal
Mobile, handy and straightforward – that is parameter setting for the automatic GEZE door systems using the ST 220 service terminal. Communication and data exchange between the service terminal and the door drive is via an integrated RS485 interface. The large illuminated display is easy to operate thanks to the plain text display. The service terminal is equipped with a readout function for servicing and diagnosis work. Power is supplied via the door system. Password protection to block operating parameters and servicing data guarantees security against unauthorised modifications.



GEZEconnects



ST 220 service terminal



myGEZE Bluetooth® module

Installation drawings Revo.PRIME

TYPES OF FLOOR RINGS

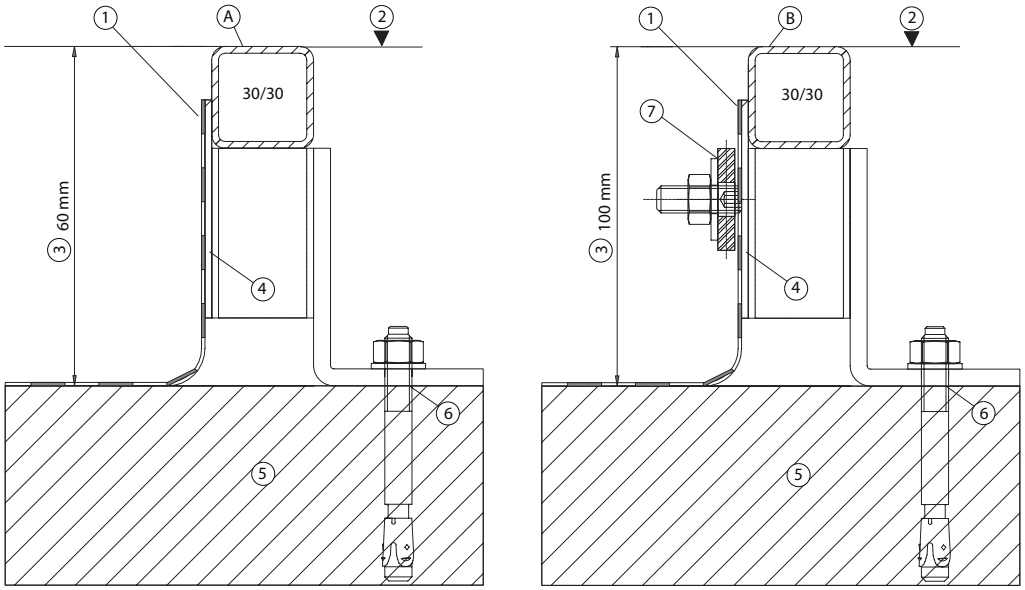

A = Stainless steel floor ring with retaining plate I B = Floor ring with loose and fixed flange I 1 = Seal on site I 2 = Finished floor level I
3 = Floor structure (min.) I 4 = Retaining plate I 5 = Unfinished floor I 6 = Fixing to unfinished floor I 7 = Loose and fixed flange

SIDE ELEMENT STOP WITH NIGHT-TIME CLOSER REVO.PRIME

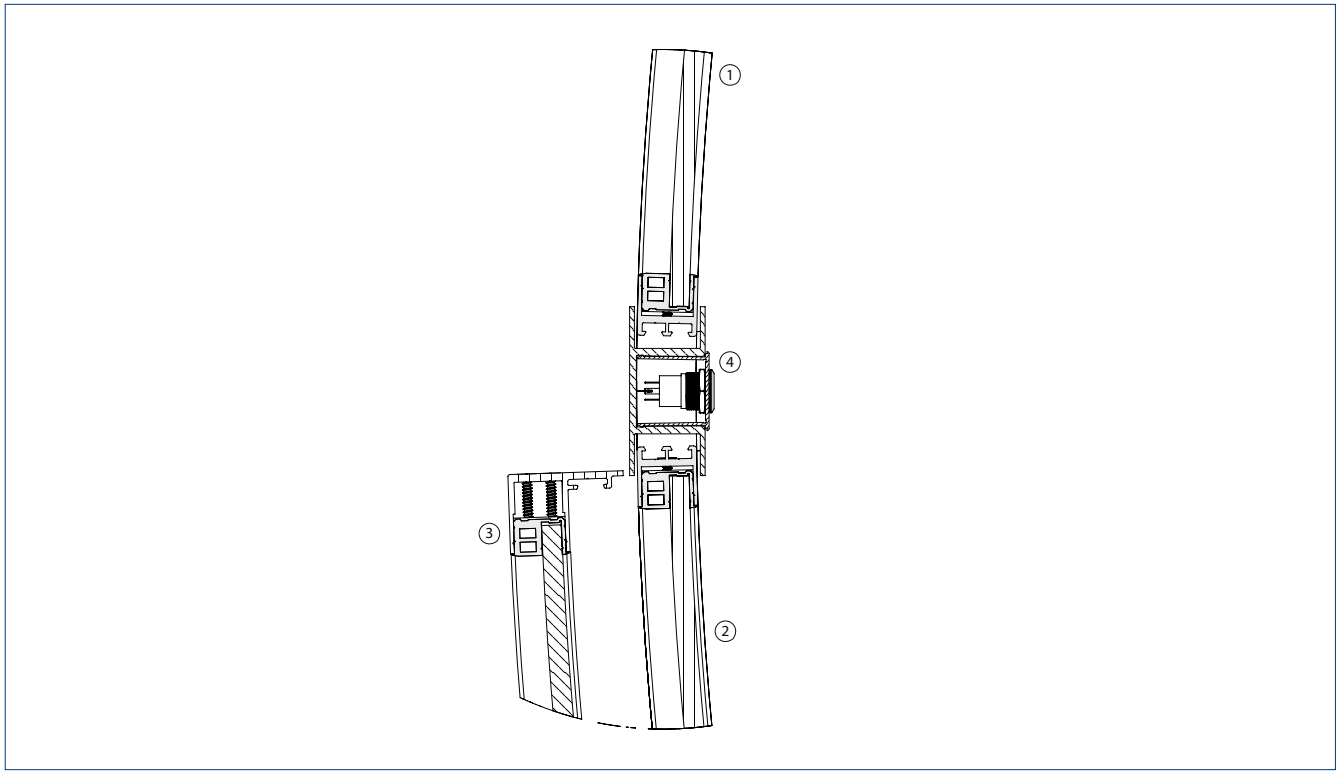

1 = Side wall inside | 2 = Side wall outside | 3 = Night-time closer on the outside | 4 = Side element stop | Release push button (optional)

NIGHT-TIME CLOSER REVO.PRIME

DETAIL INSIDE-RUNNING NIGHT-TIME CLOSER SIDE ELEMENT STOP

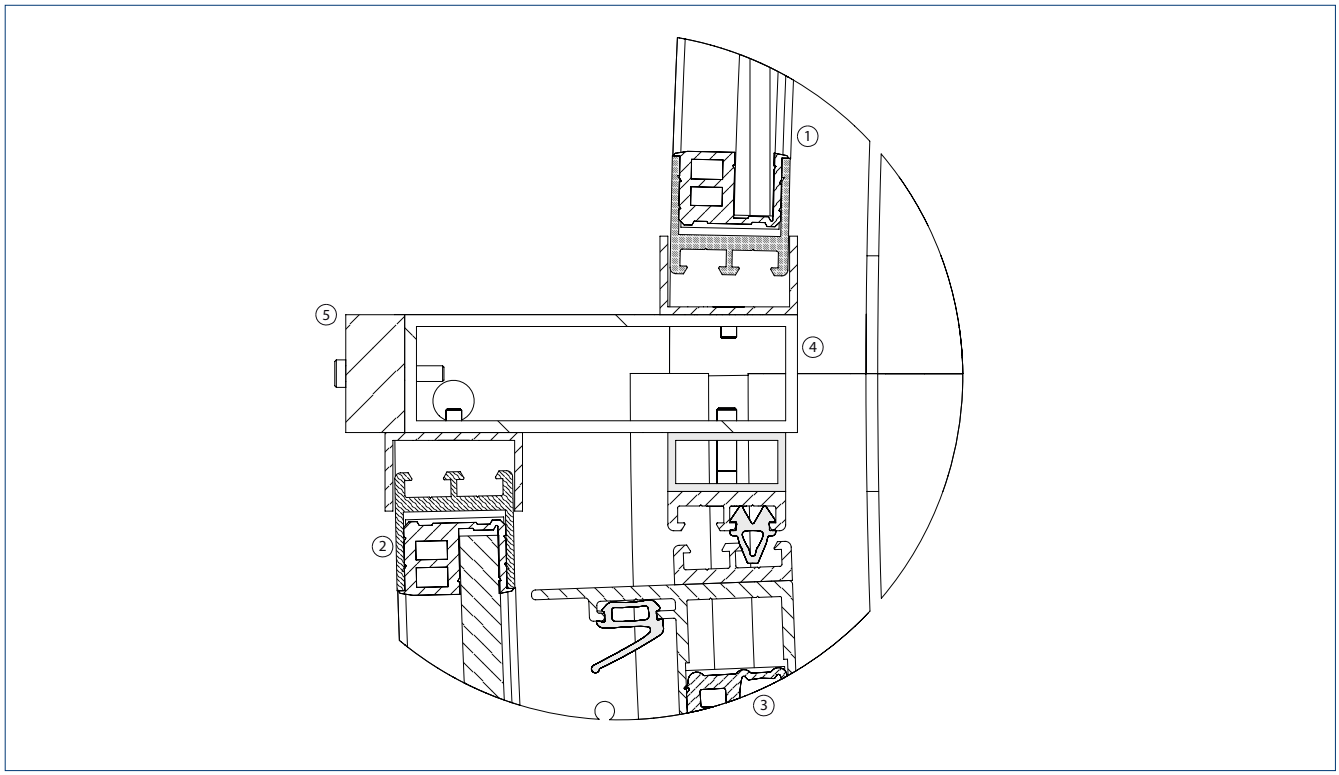

1 = Side wall inside | 2 = Side wall outside | 3 = Inside-running night-time closer | 4 = Side element stop | 5 = Façade connection

REVO.PRIME CEILING VARIANTS

STANDARD CEILING VARIANT

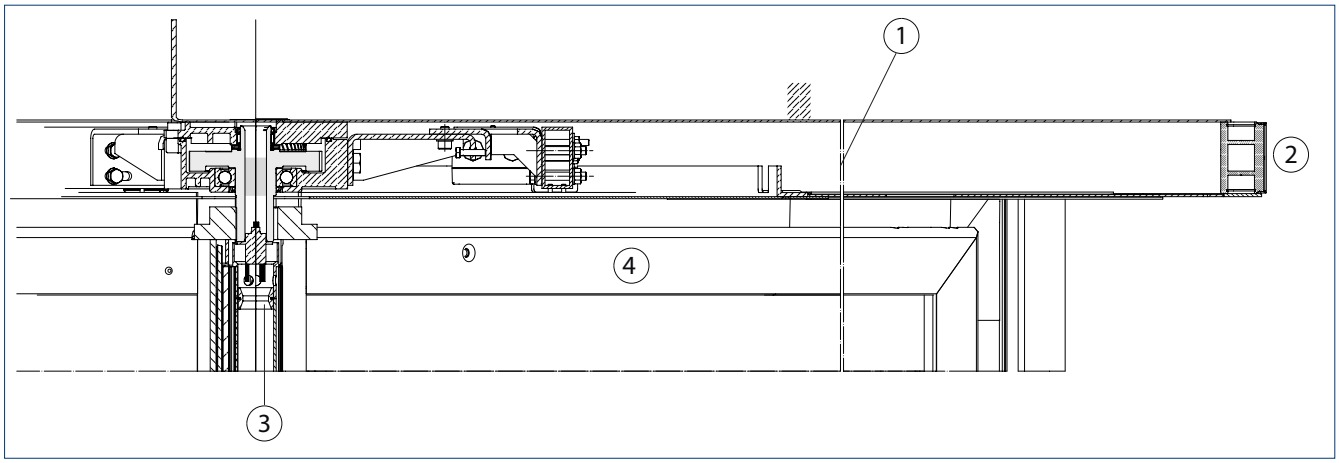

1 = Ceiling construction | 2 = Canopy profile | 3 = Swivelling axis | 4 = Side-hung leaf

CEILING VARIANT WITH NIGHT-TIME CLOSER (NV)

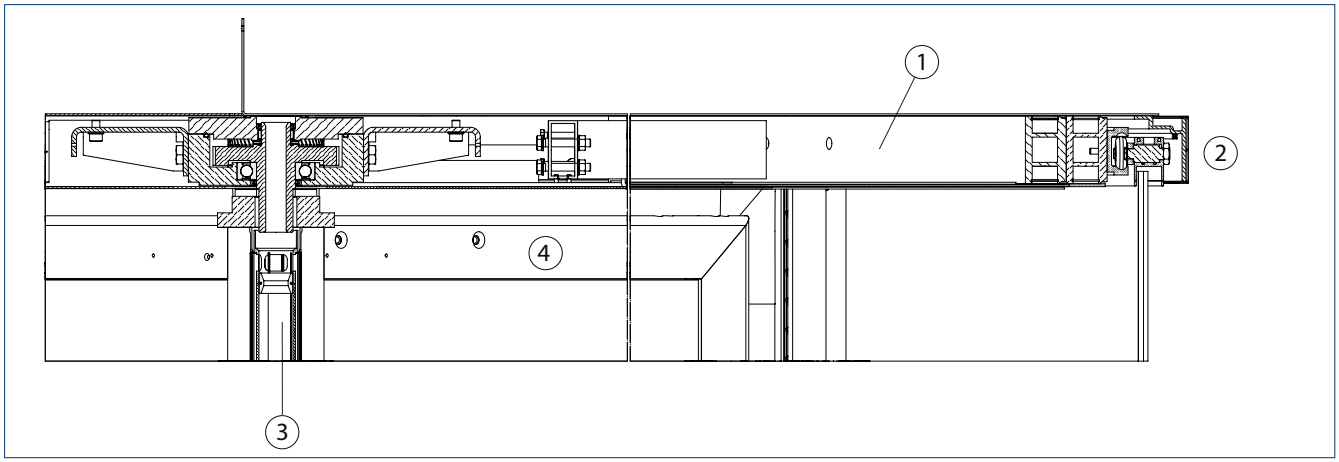

1 = Ceiling construction | 2 = Canopy profile with night-time closer on the outside | 3 = Swivelling axis | 4 = Side-hung leaf

CEILING VARIANT WITH INSIDE-RUNNING NIGHT-TIME CLOSER (INV)

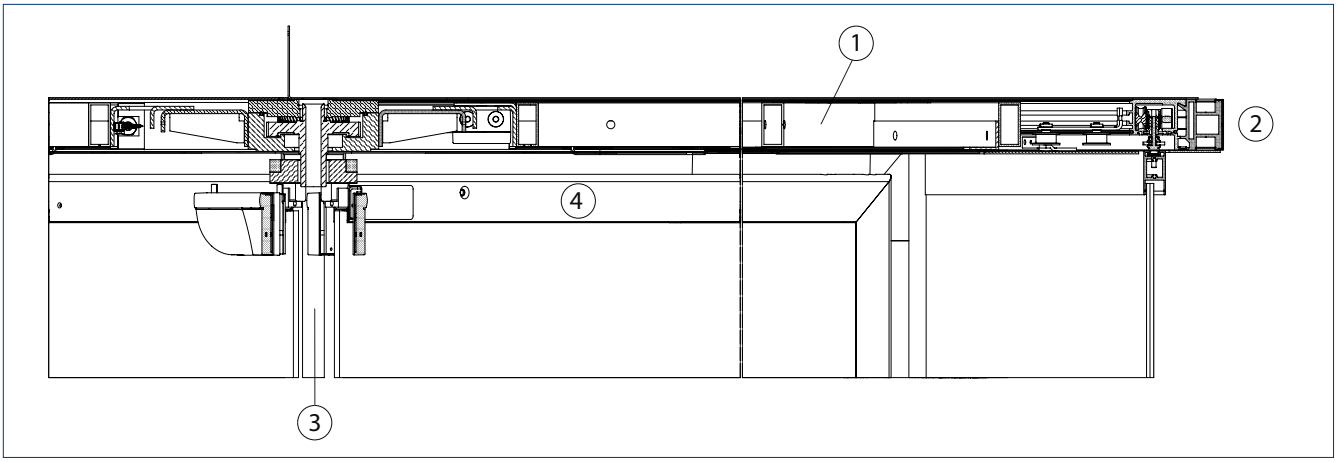

1 = Ceiling construction | 2 = Canopy profile with inside-running night-time closer | 3 = Swivelling axis | 4 = Side-hung leaf

Note: Allow 40 mm on each side and at the top for door assembly.

UNDERFLOOR DRIVE REVO.PRIME

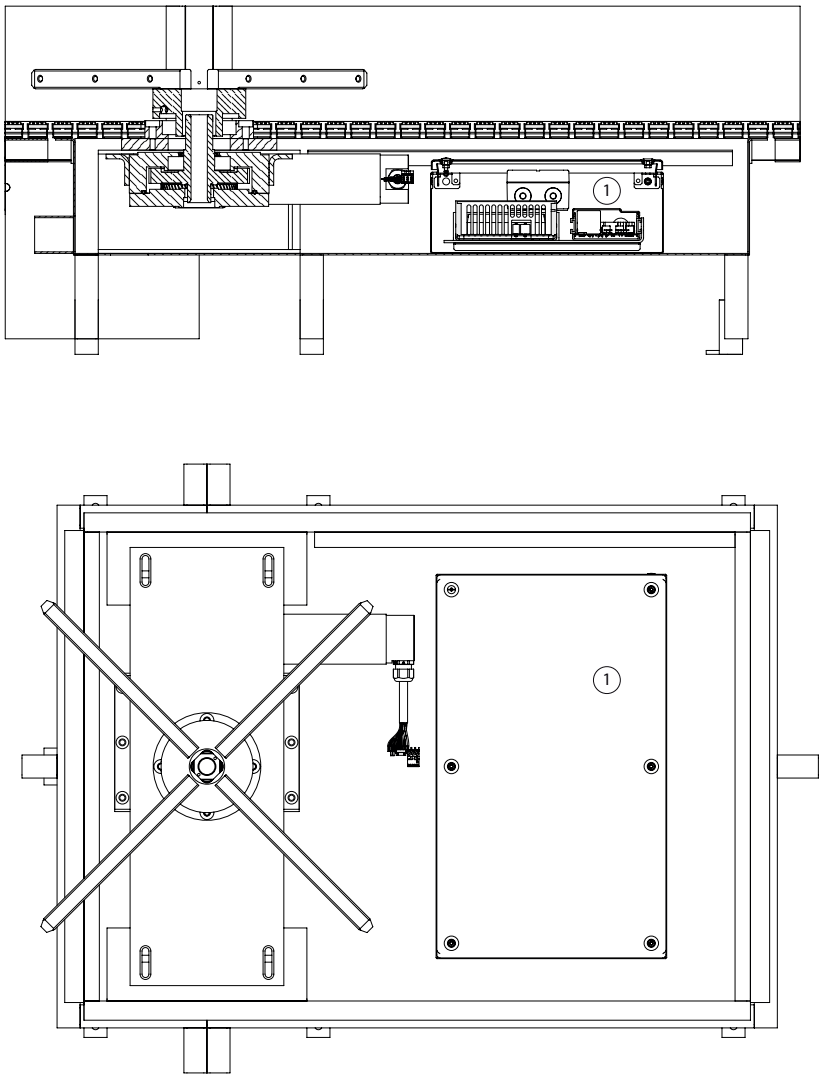

1 = Control cabinets

→ **Note:** Drive box dimensions: Revo.PRIME GG revolving door (with drive box) 871 × 614 × 180 mm (LxWxH)

AIR CURTAIN REVO.PRIME

TOP OR PLAN VIEW OF AIR CURTAIN

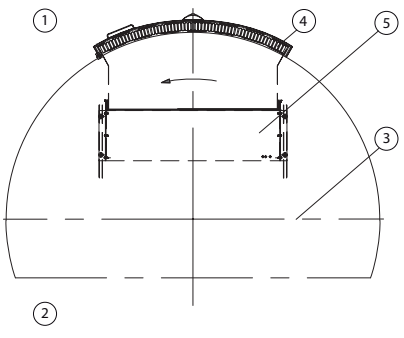

1 = Inside | 2 = Outside | 3 = Axis | 4 = Outlet duct | 5 = Air curtain

VERTICAL SECTION OF AIR CURTAIN

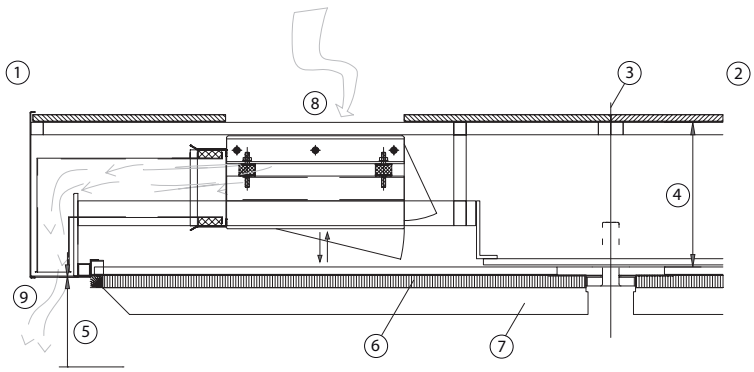

1 = Inside | 2 = Outside | 3 = Axis | 4 = Canopy height | 5 = Clear passage height | 6 = Brush | 7 = Side-hung leaf | 8 = Opening for air outlet | 9 = Extraction opening

Cable plan drive ceiling installation

For more detailed information about connection of the activation devices and sensors see the wiring diagram 201216 (English version)

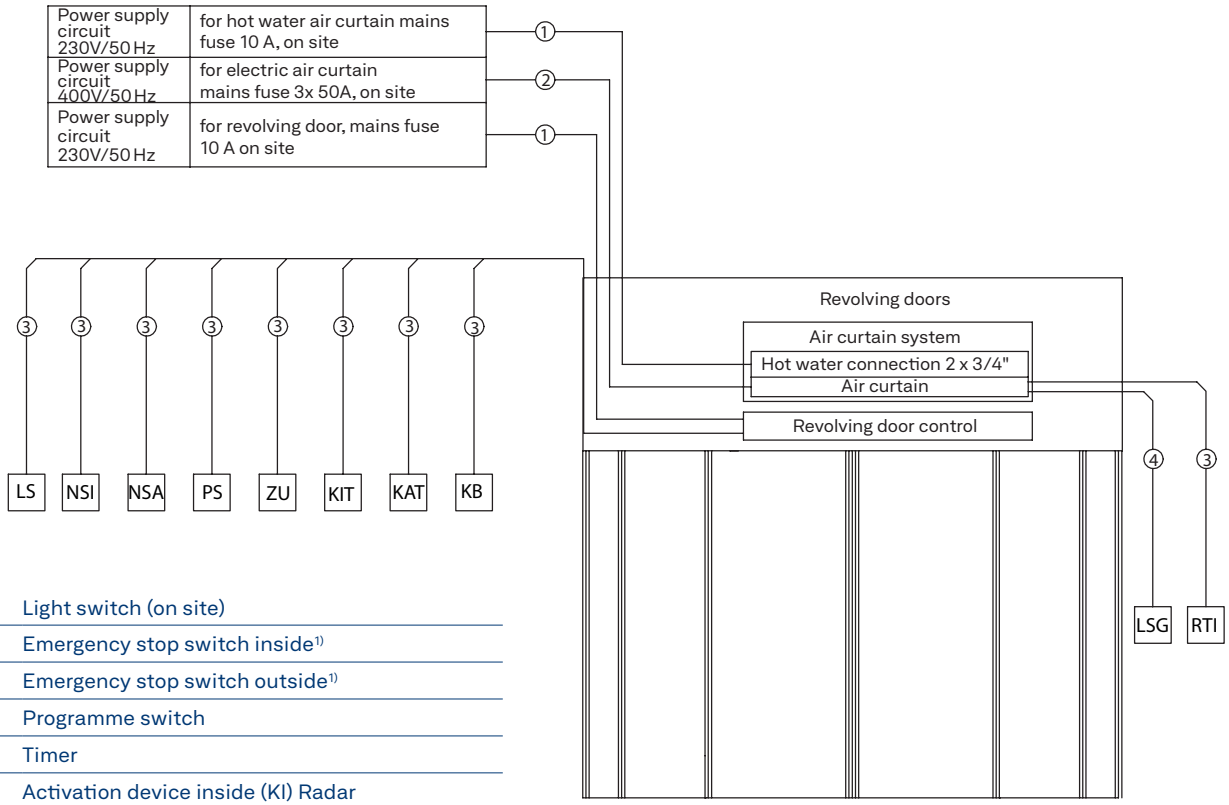

The cable must protrude at least 6 m out of the wall

LS	Light switch (on site)
NSI	Emergency stop switch inside[1]
NSA	Emergency stop switch outside[1]
PS	Programme switch
ZU	Timer
KIR	Activation device inside (KI) Radar
KAR	Activation device outside (KA) Radar
KIT	Activation device inside (KI) push button[2]
KAT	Activation device outside (KA) push button[3]
KB	Activation device authorised (KB)[4]
LSG	Switchgear for air curtain
RTI	Inside room thermostat

Cables

① NYM-J 3 x 1.5 mm²

② NYM-J 5 x 16 mm²

③ JE-Y(ST)Y 2 x 2 x 0.8 mm

④ JE-Y(ST)Y 10 x 0.8 mm max. 20 mm

[1] Install emergency stop switches at all access points
[2] Several activation devices (KI) may be installed inside
[3] Several activation devices (KA) may be installed outside
[4] Several activation devices authorised (KB) may be installed

Notes:

- Wiring in accordance with VDE 0100
- Wiring, connection and commissioning must only be carried out by authorised electricians.
- We will not assume any warranty or provide service if GEZE products are combined with third-party products.
- Additional activation devices for the revolving door drive are installed within the profiles located outside or within the door drum.
- The cables shown in this wiring diagram must be laid on site.
- The wiring diagram is only a schematic representation. The exact cable guide must be determined on site.
- Cable and water connections must be installed on site by a specialist company.

Cable plan underfloor installation

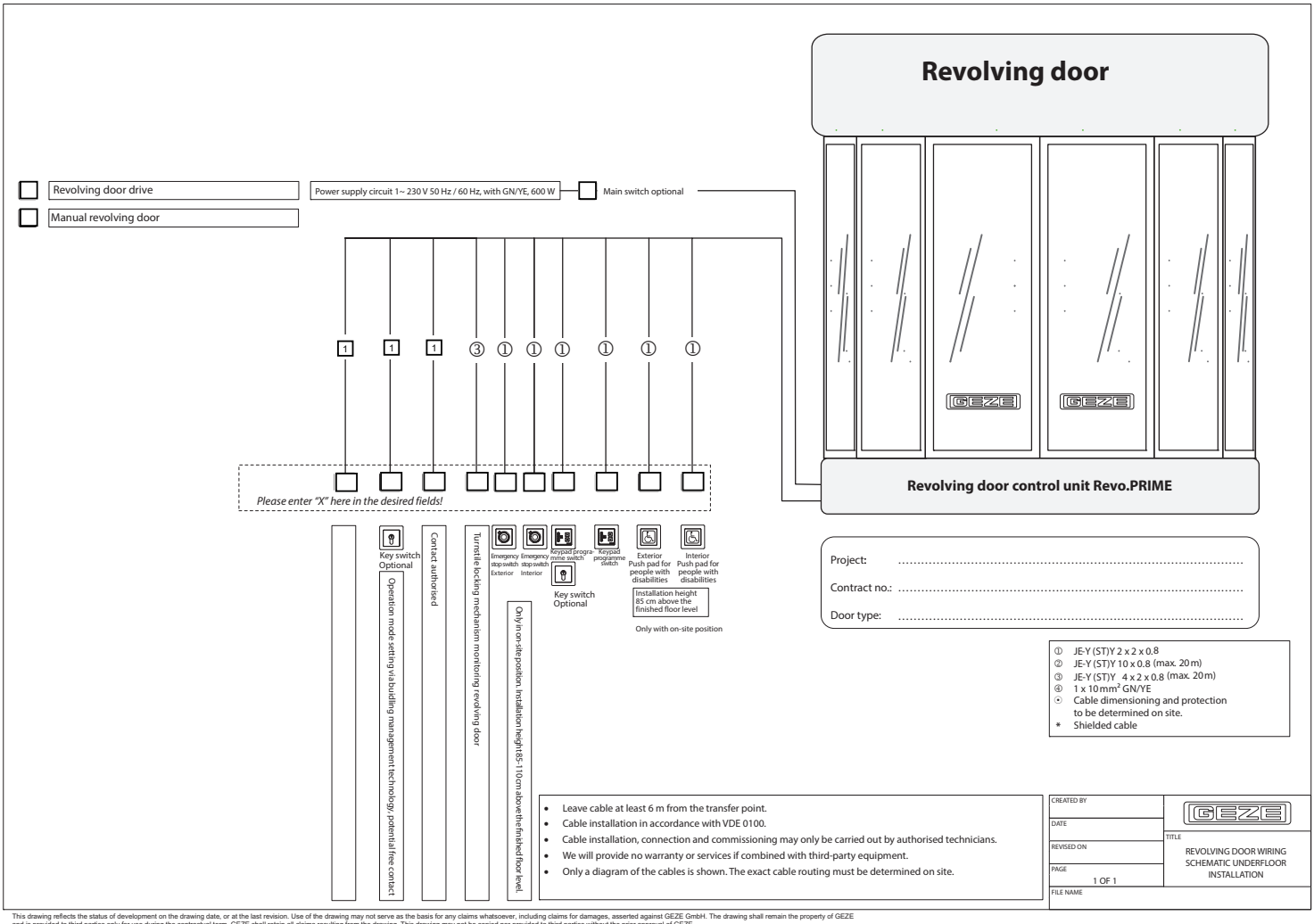

This drawing reflects the status of development on the drawing date, or at the last revision. Use of the drawing may not serve as the basis for any claims whatsoever, including claims for damages, asserted against GEZE GmbH. The drawing shall remain the property of GEZE and is provided to third parties only for use during the contractual term. GEZE shall retain all claims resulting from the drawing. This drawing may not be copied nor provided to third parties without the prior approval of GEZE.

Reference projects



HQ Deloitte, Italien (Foto: GEZE ITALY)

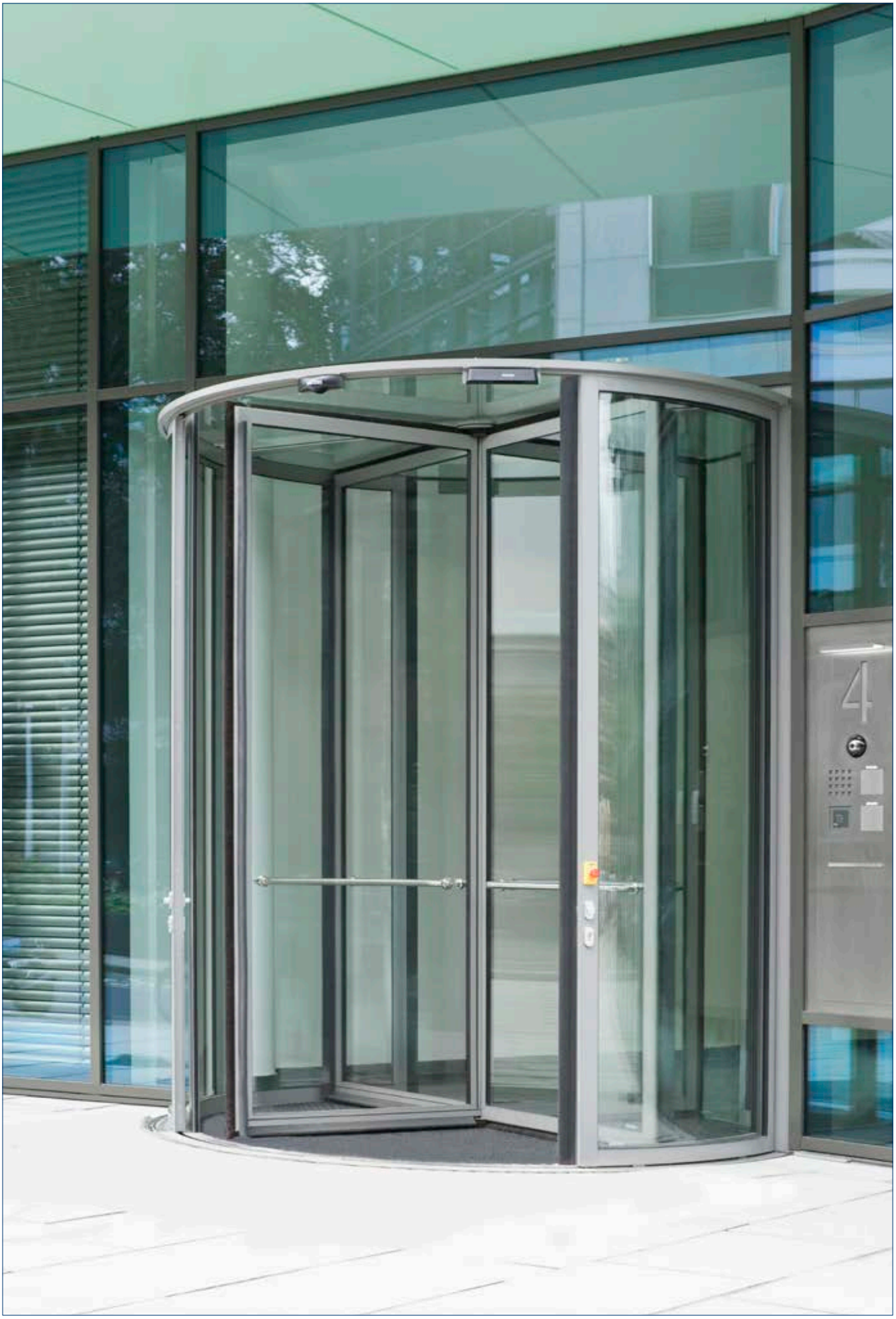

Foto: Lothar Wels / GEZE GmbH



Foto: Lothar Wels / GEZE GmbH

We are GEZE.

For liveable buildings

GEZE stands for innovation, high quality and comprehensive support of building technologies. From the initial idea, planning and operational implementation with standard products to customised system solutions and individual service and maintenance plans. We offer an extensive product range of door, window and safety technology products and are a major driving force behind the digital networking of building automation.

GEZE GmbH

Reinhold-Vöster-Straße 21 – 29

71229 Leonberg

Deutschland

Telefon: +49 7152 203 0

Telefax: +49 7152 203 310

E-Mail: info.de@geze.com

www.geze.com

2026_11 ID-Nr. 132050 EN Subject to change without notice