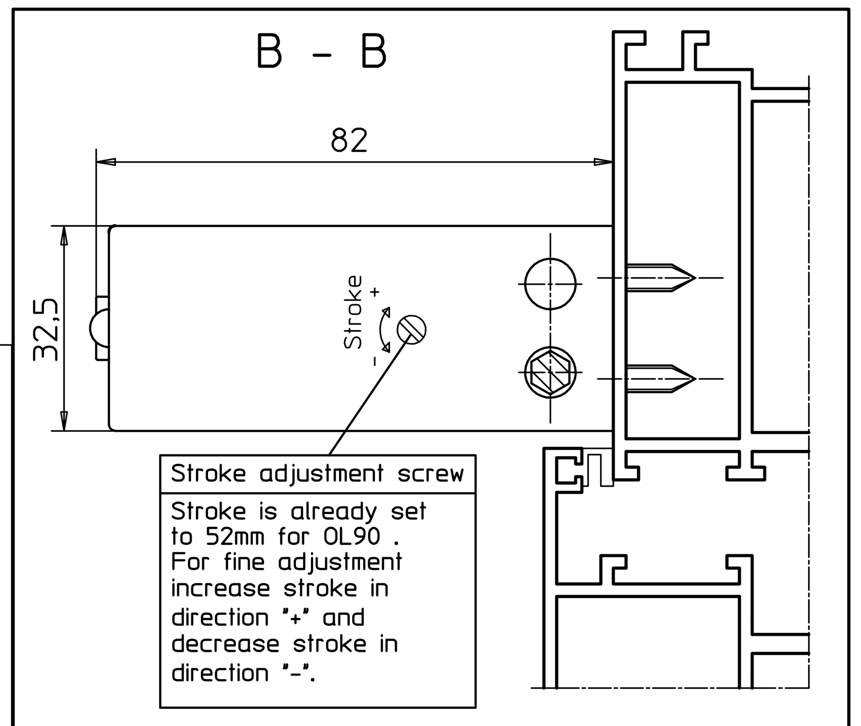

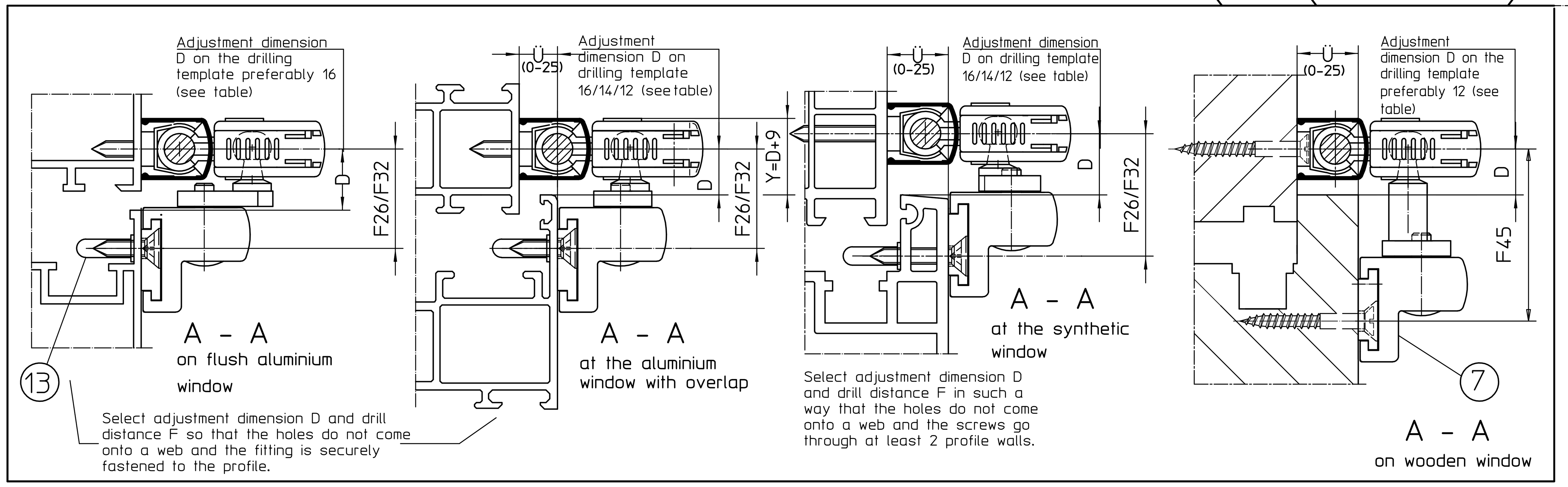

Mounting elements

Window type	Fixing screws	Drillø
Wood	Countersunk wood screws 4x35 DIN 97 o.DIN 7997	2.5mm
Aluminium	Countersunk self-tapping screws 4.2xL DIN7972 or DIN7982 Screw must go through min.1.8mm profile wall	3.5mm
synthetic	Countersunk self-tapping screws 4.2xL DIN7972 or DIN7982 Screw must go through min.2 profile walls	3.5mm

Fixing screws are not included in the delivery.

Technical data

- Opening width approx. 220mm
- Fitting stroke 54mm
- Motor stroke adjustable from 42 to 66mm
- IP rating IP54
- Further technical data of the electric drove see wiring diagram 45109-9-0950 (for E212R) and 45109-9-0959 (for E212R1)

Order requirement * for OL95 with...		Fitting parts (see BOM) A	B	B1	C	D	E	F	G	H	
...Electric drive E212R1 for group control (see switching requirement)	Aluminium/ snthetic window	X*			X	X	X**				
	Wooden window		X*	X*	X	X	X**				
...Electric drive E212R for group control (see switching requirement)	Aluminium/ synthetic window	X*			X			X	X**		
	Wooden window		X*	X*	X			X	X**		
Electric drive E212 24V for group control (see switching requirement)	Aluminium/ synthetic window	X*			X					X	E260N
	Wooden window		X*	X*	X					X	E260N

X* -up to 4 additional scissors per motor gear unit
X** -Group control up to max.6 motors
* Cover profile and rod must be ordered separately
Rod L min.=333mm; cover profile L min.=134mm (see formula)

Pos.	Pc.	Name	EV1	dark bronze	white RAL9010	white RAL9016	acc. RAL...	Pc.
A		Scissors OL95 Content:	82445	82446	82447	82448	82449	7
1	1	Flat form scissors OL95						
2	1	Scissors base						
3	1	Casement bracket						
4	1	Rod guide						
5	1	Screw plate						
6	1	Connection						
13	2	Protective cap						
B		Scissors OL95 without casement bracket Content:	84194	84195	84196	84197	84199	5
	1	Pos.: 1; 2; 4; 6;						
B1		Casement bracket for wooden window with Euro-groove F=45 Content:	30886	30887	30888	30890	30889	2
	1	Pos.: 5;						
7	1	Casement bracket for wooden window						
C 10	1	Rod coupling OL90	43546					
D		Electric drive E212R1 for group control Content:	20835	20836	20837	20839	20838	3
8	1	E212R1/230V AC						
9	1	Connecting rod						
E	1	Selector switch E33 surface mounting Open-stop-close	48941					
	1	Selector switch E27 flush mounting Open-stop-close	48942					
F		Electric drive E212R for group control Content:	05428	05429	05430	15435	06683	3
8	1	E212R/230V AC						
9	1	Connecting rod						
G	1	Vent switch E50/1 Open-stop-close Surface and flush mounting	06575					
H		Electric drive E212 24V Content:	10899	10901	10911	15540	10915	3
8	1	E212 24V DC						
9	1	Connecting rod						

Rods and cover profiles						
Cover profile L=2m *	30401	30402	30403	30405	30404	
Cover profile L=3m *	30396	30397	30398	30400	30399	
Cover profile L=6m	27558	27559	27560	27561		
Rod ø8 galvanised L=2m	16555					
Rod ø8 galvanised L=3m	16591					
Rod ø8 galvanised L=6m	16592					
Accessories (Must be ordered separately)						
11 Drilling template	for wood 54799 yellow	for plastic/metal 54800 blue				
12 Additional drilling template OL90N for wooden windows F=45	28141					
4 10 Rod guide	10878					1each

* Cover profile mitre cut on both sides

Drilling template application

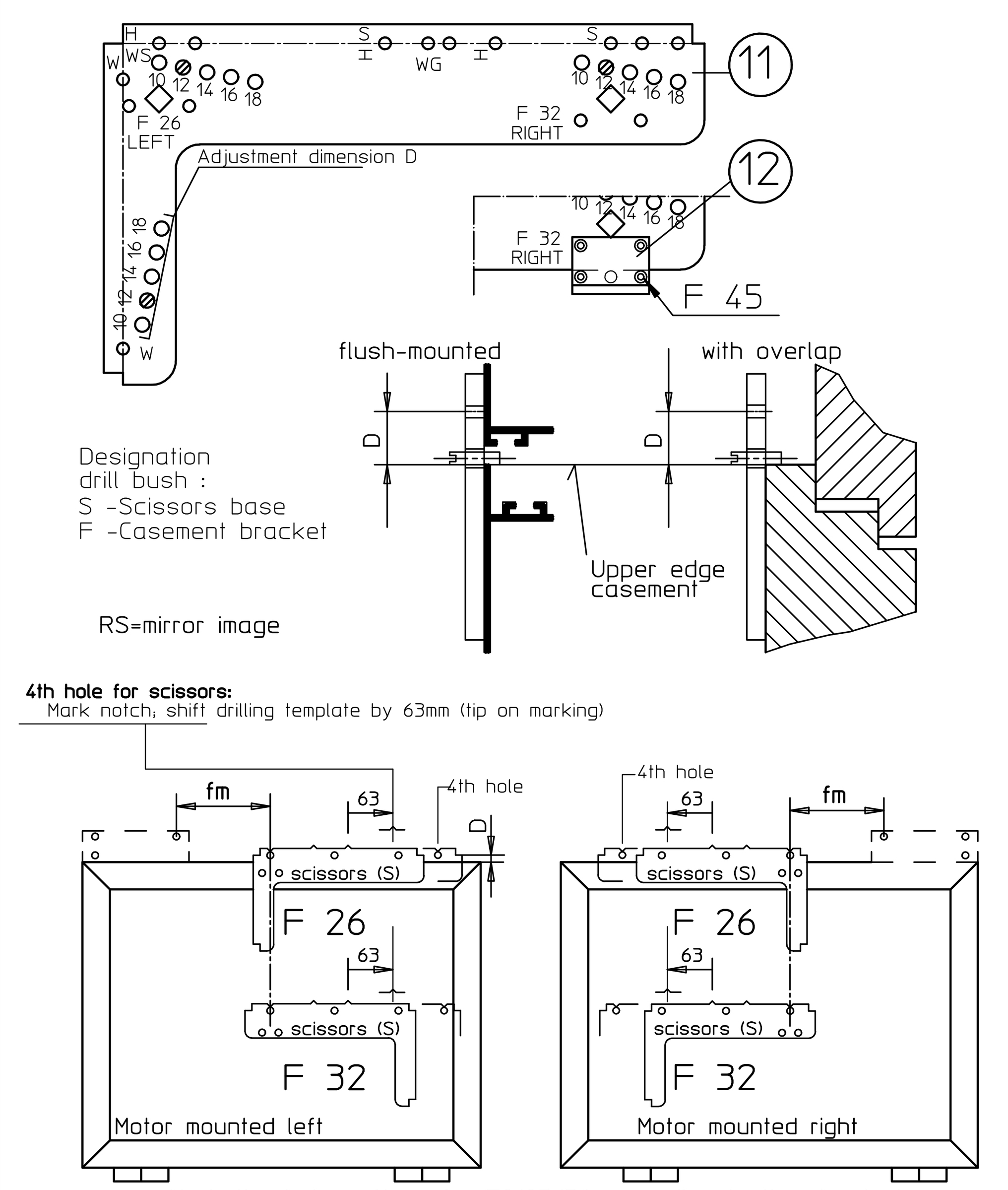

Mark the hole pattern for E212R/R1 according to the drawing!

Casement width a	f-dimensions	Lengths of rods (LQ) and cover profiles (LA)
660-760	f1=380	1 scissors
760-1200	f1=a/2	
1200-1500	f1=380 f2=a-697	2 scissors
1500-2100	f1=a/4 f2=a/2	
(from a=1650 also 3 scissors possible)		
1650-2300	f1=380 $f2=\frac{a}{2}-323$ f3=f2	3 scissors
2300-2800	f1=a/6 f2=a/3 f3=a/3	

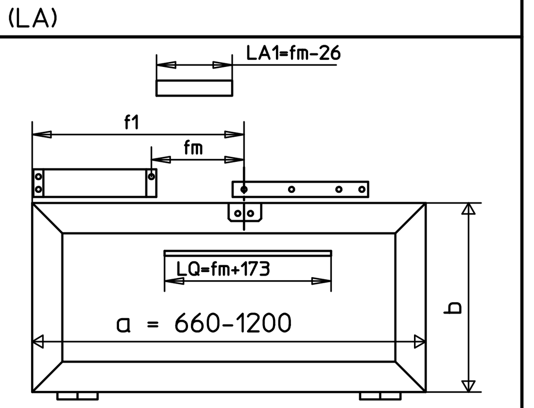

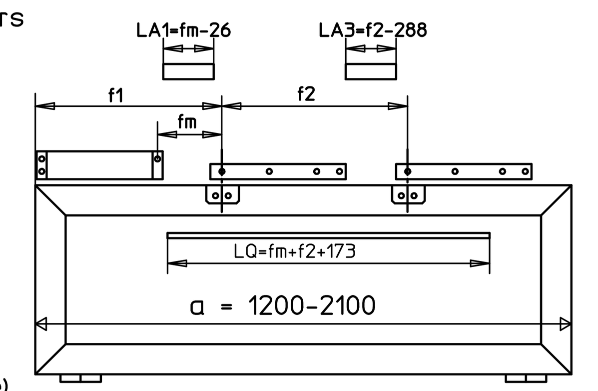

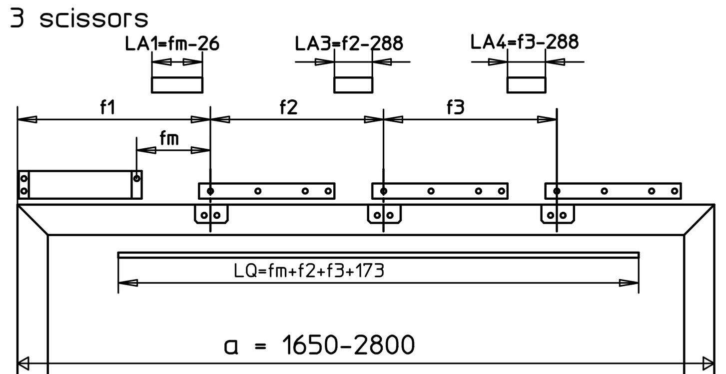

Area of application

The opening width of the OL95 scissors is approx. 220mm, the fitting stroke is 54mm.
The OL95 can be used for vertically installed rectangular windows with bottom order top-hung casements inward opening in dry interiors.
All other applications must be requested from the factory.

m rel panel weight	a Total casement width or sum of all casement widths	n min. Minim. number of scissors
max. 40kg/m²	from 660 to 1200mm	1
	from 1200 to 1700mm	2
	from 1700 to 2000mm	3
max. 35kg/m²	from 1200 to 1900mm	2
	from 1900 to 2300mm	3
max. 30kg/m²	from 1200 to 2000mm	2
	from 2000 to 2600mm	3
max. 25kg/m²	from 1200 to 2100mm	2
	from 2100 to 2800mm	3

In order to ensure the necessary driving rain safety of the window according to DIN 18055 for the respective application, we recommend the installation of 3 scissors from a=1650 mm. Provided that the range of application of the OL 95 (see table) is not exceeded, the total casement weight must not exceed 60 kg.

a = Casement width (min. 660mm) or sum of all casement widths
b = Casement height min. 350mm
i = Distance from the centre of gravity of the casement to the hinge pivot point min. 10 max. 60 mm
Ü = Overlap height 0-25mm
D = Outer edge of casement to centre of V-arm (see table)
X = Side clearance = D+10mm
Y = Upper clearance (see table)

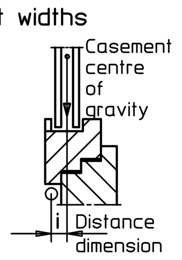

When using the additional locking, attach with D=16mm!		
b Casement height	D top	Y top
350 to 400mm	18mm	41mm
400 to 450mm	16 to18mm	D + 23mm
450 to 600	14 to18mm	D + 23mm
from 600mm	12 to18mm	D + 23mm

Switch requirement

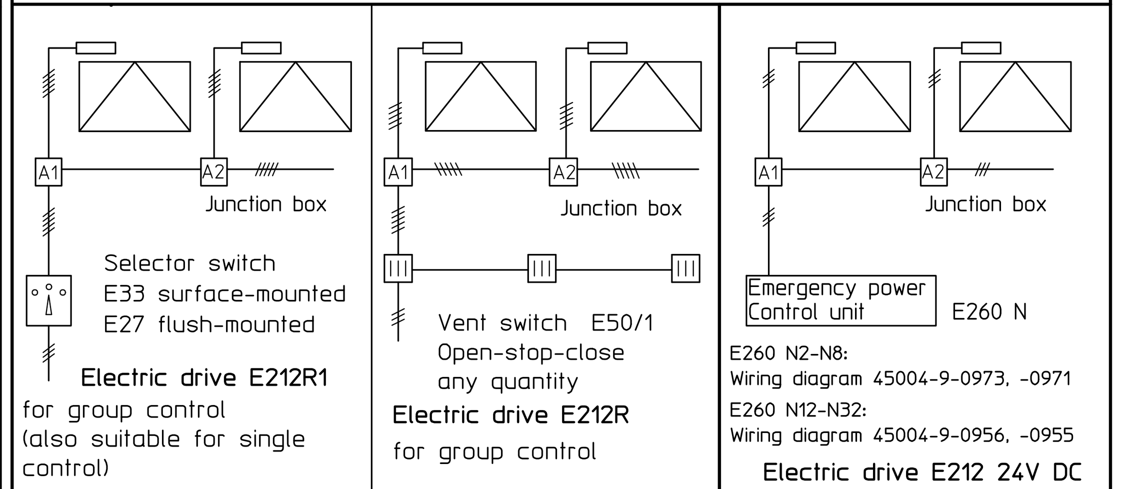

Cable 5x1.5mm² with GN/YE
Power supply circuit 3x1.5mm² with GN/YE

Cable 3x...mm² ohne GN/YE Calculate cross-section depending on cable length

Important information:

- Installation drawing, wiring diagram, installation instructions, maintenance and operating instructions as well as the guidelines for power-operated windows, doors and gates (ZH1/494) must be observed;
- The specified area of application must be observed;
- The prescribed fitting dimensions must be observed;
- The prescribed mounting elements must be used;
- In order to avoid injuries, protective caps must be turned on projecting threads of the fixing screws; - Fittings are drawn in the closed position, but assembly is carried out in the open position;
- All fixing screws must be tightened in the open position with an Allen key SW3 with 5Nm;
- After assembly and before commissioning, the function of tightening all fixing screws must be checked, and all fixing screws must be tightened again;
- The joints and sliding points must be greased with an acid-free grease in accordance with DIN 51825;
- The free accessibility of the fitting parts for greasing and maintenance must be ensured in accordance with DIN 18357;
- If rods and cover profiles from other manufacturers are used, GEZE assumes no warranty and no liability for the resulting damage and consequential damage;
- From a free rod length of 600mm, rod guides must be used;
- The use of a suitable safety catch is prescribed for bottom-hung windows (see GEZE gripping and cleaning scissors);
- After reaching the end positions (open and closed) the operating light must extinguish immediately;
- For assembly, observe dimension "Q" from the end of the scissors bearing to the reveal Q= min. 230 mm

0 10 20 30 40 50mm

Diese Zeichnung entspricht dem Entwicklungsstand des Zeichnungsdatums bzw. der letzten Änderungseintragung. Aus der Benutzung der Zeichnung können keine Ansprüche, gleich welcher Art, einschließlich Schadenersatzansprüche, abgeleitet und gegen GEZE geltend gemacht werden. Die Zeichnung bleibt unser Eigentum und ist Dritten nur für die Vertragsdauer zur Benutzung überlassen. Sämtliche sich aus der Zeichnung ergebenden Ansprüche stehen ausschließlich GEZE zu. Ohne vorherige Zustimmung von GEZE darf diese Zeichnung weder vervielfältigt noch Dritten zugänglich gemacht werden. This drawing shows the actual state of product development at the date of the drawing or the revision date. No claims for damages in any form can be made against GEZE as a result of the interpretation of this drawing. This drawing remains the property of GEZE and is made available to third parties only for the duration of contractual obligations. All rights connected with this drawing remain in possession of GEZE. This drawing may not be copied or handed over to third parties without the express consent of GEZE.

Papierausdrucke dieser Zeichnung unterliegen nicht dem Änderungsdienst! Printed drawings are not revision controlled!

EMPB = Erstmusterprüfbericht /Initial sample test report

EMPB Dok.version doc.version	Datum date	Name name	Mitteilungs-Nr. Doc. change no.
04	15.10.21	u1270	*
03	12.05.20	u1270	*
02	11.02.20	u1270	2642

GEZE GmbH P.O. Box 13 63 71226 Leonberg Germany

Benennung / designation: **OL 95 with E 212 horizontal**

vertraulich / confidential

	Datum/date	Name
erstellt / drawn	15.10.21	u1270
Frg. Prod./Rel. Prod	20.10.21	tbf1

Blatt / von sheet / of: 1 / 1
Maßstab scale
Material-Nr. ID-no.
Frg. Prod./Rel. Prod
Zeichnungs-Nr. / document-no.: 40445-EP-03